ZVAC Series

Pneumatic Control Valve

UNIVERSAL

Features

◇ Be used with ZVAB-NC

◇ ZVAB-NC provides the air control signal to realize the opening and closing of the control valve and save energy

How to order

ZVAC - NO

① ②

① Series	② Function	Connection thread
ZVAC	NO - Normally open	Default, G1/8 male thread

Technical parameters

Model	Air supply pressure bar	Control mode	Action mode	Working temperature ℃	Weight g
ZVAC-NO	1.0~8.0	Pneumatic control	NO	0~60	55

Dimensions (mm)

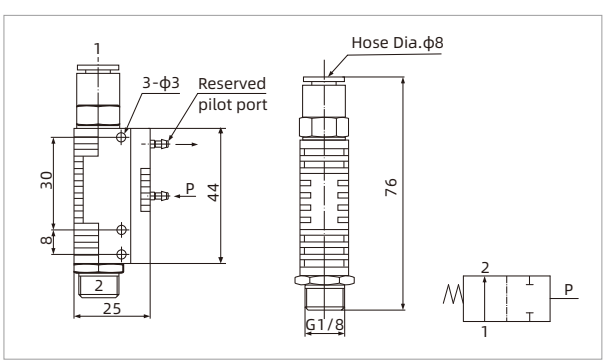

ZVAC-NO

Energy-saving system

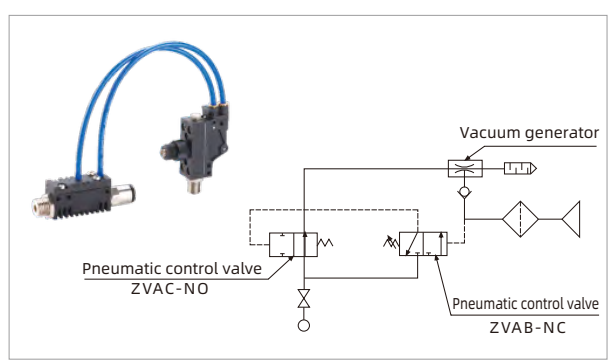

ZVU-ES